Hornell Model Railroad Club - Depot Layout
Switch Machine Decoder Connections

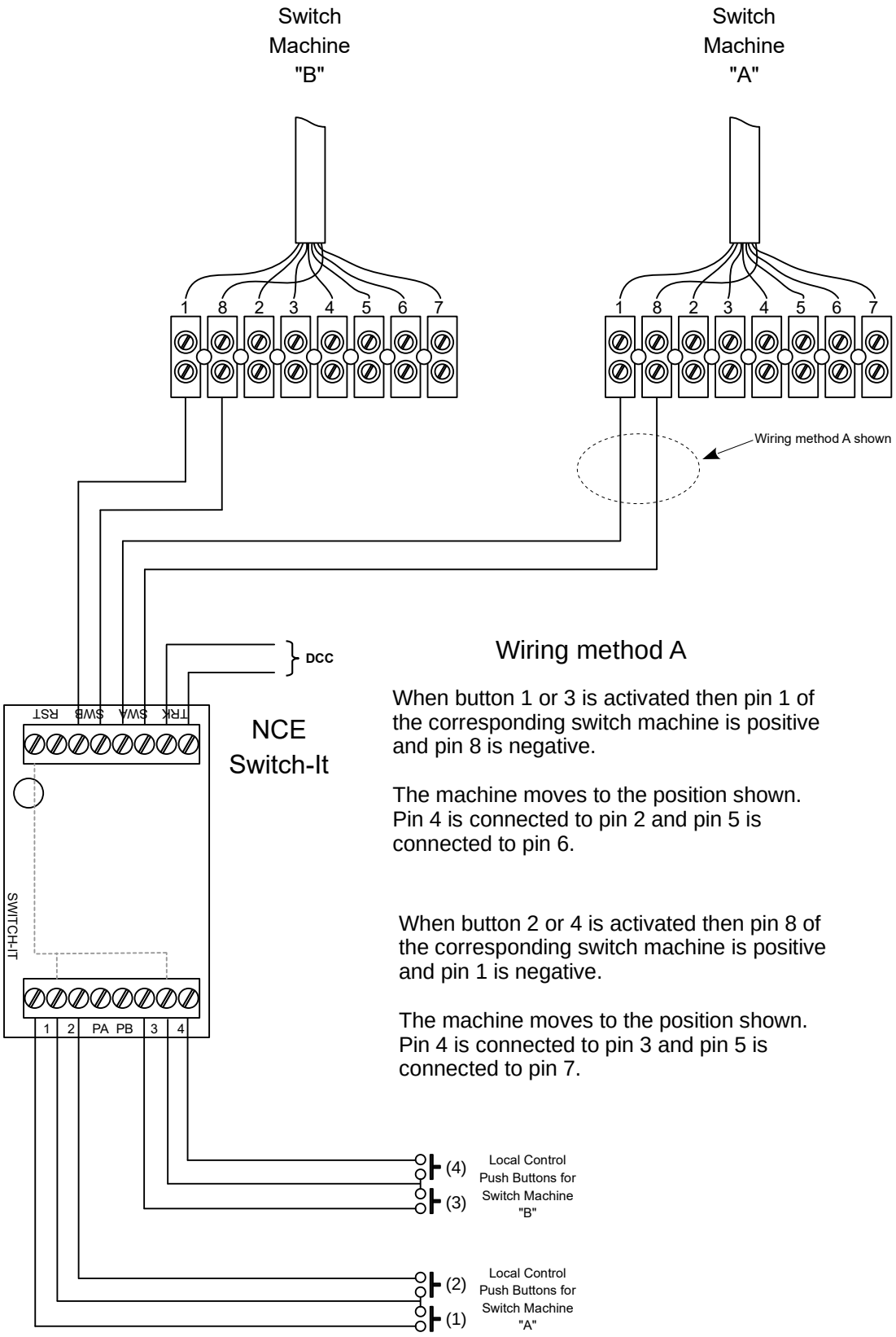

Wiring method A

When button 1 or 3 is activated then pin 1 of the corresponding switch machine is positive and pin 8 is negative.

The machine moves to the position shown. Pin 4 is connected to pin 2 and pin 5 is connected to pin 6.

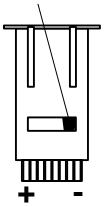

4 – 2, 5 – 6

When button 2 or 4 is activated then pin 8 of the corresponding switch machine is positive and pin 1 is negative.

The machine moves to the position shown. Pin 4 is connected to pin 3 and pin 5 is connected to pin 7.

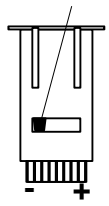

4 – 3, 5 – 7